School Toilets
5 Brearley Court, Baird Road Waterwells Business Park Gloucester GL2 2AF
Phone: 01275 400456
Web: https://www.school-toilets.co.uk
Email: sales@school-toilets.co.uk

Non Concussive Time Flow Swan Neck Tap



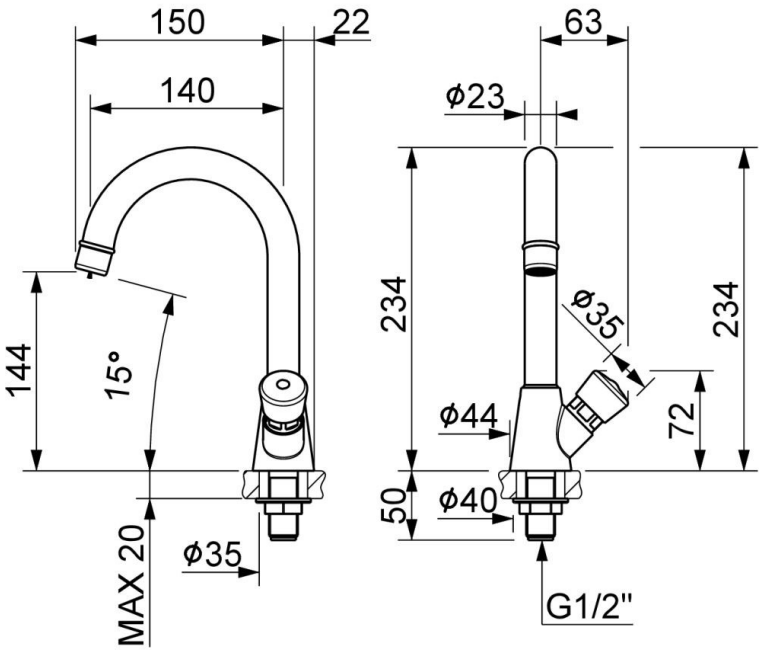

Product Code: SNTAP

This swan neck tap is operated by a time flow press button. The swan neck makes the tap easy to wash hands and is also used as a very robust bottle filling tap.

The press button operation is easy to operate by users of all ages and the time flow operation prevents the taps being left running and wasting water.

Delivery

From stock typically 1 to 2 working days

Tech Spec

Chrome plated press button time flow non concussive tap
8 to 12 second run time
Fixed swan neck spout
3 litre per minute aerator
Supplied as a single tap
WRAS approved
Brass backnut.
2 years manufacturers warranty (warranty will not apply in cases of debris inside of the tap).
To ensure the proper functioning and longevity of this unit, a Y-strainer must be installed as part of the water supply system. The Y-strainer is essential for protecting the internal components and maintaining the correct flow characteristics of the tap. Failure to install a Y-strainer will result in the warranty being void.
Italian manufactured product.

Specification

Max Inlet Pressure 5 Bar
Min Inlet Pressure 0.1 Bar
Timed flow (standard) approx 10 seconds at 1 Bar
22mm tap hole required
1/2" standard connection

Flow Rates

3 litres per minute

**All pictures shown are for illustration purpose only and may be subject to change without notice. Actual product may vary due to product enhancement.
All dimensions shown are for guidance only and may be subject to change or alteration without notice. All items manufactured or purchased separately from a third party to fit our products should be checked against the actual dimensions of the physical product before purchase. We will not be liable for third party costs and consequential loss associated with the items not fitting third party components.**