School Toilets
5 Brearley Court, Baird Road Waterwells Business Park Gloucester GL2 2AF
Phone: 01275 400456
Web: https://www.school-toilets.co.uk
Email: sales@school-toilets.co.uk

Stainless Steel Shower Panel - Press Button



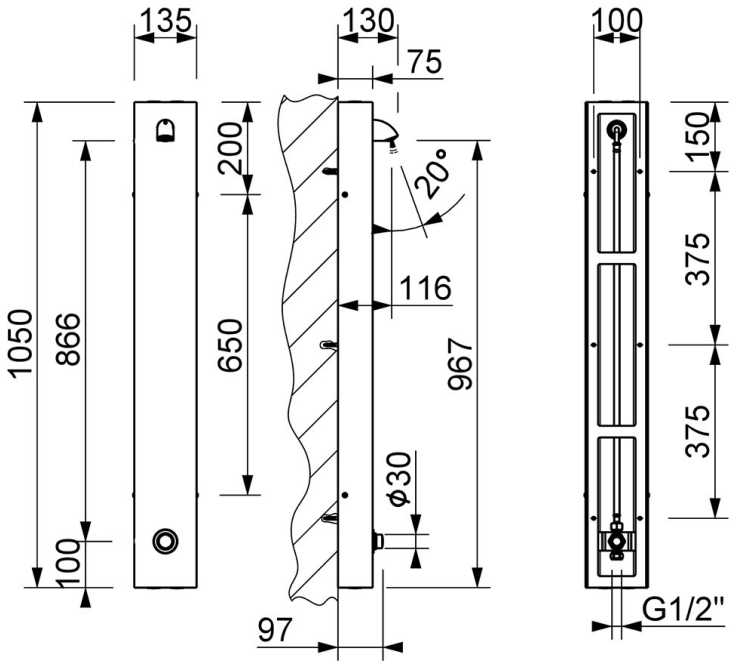

Product Code: SHPAN-PB

This wall-mounted, heavy-duty, stainless steel shower panel is built for heavy use and easy upkeep. Perfect for schools, sports centres, prisons, mental health units, and other public facilities.

The shower panel has a tamper-resistant push-button that will operate the water flow for 15–25 seconds, helping save water. The shower head is tamper resistant and anti-ligature. The shower panel is used in a lot of changing rooms and sports centres and offers a better cleaner alternative to exposed valves and pipes.

Delivery

From stock typically 1 to 2 working day

Tech Specs

Height: 1050mm.
Width: 135mm.
Projection: 129mm.
Stainless steel shower panel.
Vandal resistant.
Press button time flow valve.
15 to 25 seconds run time.
Anti-ligature shower head.
Polished stainless steel body with chrome plated valve and head.
Concealed wall fixings.
Supply - 1/2" inlet for premixed or cold water.
Suitable for top / bottom and back entry pipe installation.
Min working pressure: 0.5 Bar
Max working pressure: 6.0 Bar.
Flow rate to 15 litres per minute at 3 bar.
Ideal for areas where a compact and vandal resistant shower panel is required.

**All pictures shown are for illustration purpose only and may be subject to change without notice. Actual product may vary due to product enhancement.
All dimensions shown are for guidance only and may be subject to change or alteration without notice. All items manufactured or purchased separately from a third party to fit our products should be checked against the actual dimensions of the physical product before purchase. We will not be liable for third party costs and consequential loss associated with the items not fitting third party components.**