School Toilets
5 Brearley Court, Baird Road Waterwells Business Park Gloucester GL2 2AF
Phone: 01275 400456
Web: https://www.school-toilets.co.uk
Email: sales@school-toilets.co.uk

Top Entry Bowl Urinals - Stainless Steel



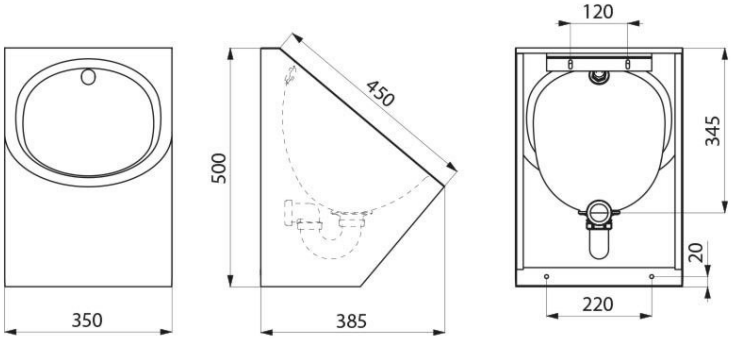

Product Code: SSBU-TE

Stainless Steel Top Entry Wall-Hung Bowl Urinals – Ideal for School Toilets

Our top entry stainless steel urinal bowls are the perfect choice for busy school washrooms. Constructed from 1.2mm thick, bacteriostatic grade 304 stainless steel with a satin polished finish, these urinals are designed for durability, ease of cleaning, and resistance to vandalism.

With a top-entry exposed water inlet, installation is straightforward and can be completed quickly from the front. The stainless steel mounting frame includes TORX anti-theft screws for added security, ensuring that the urinals stay securely in place in high-traffic areas. The waste outlet can be installed either through the back wall or the bottom of the bowl, providing flexibility for different washroom configurations.

Delivery

In Stock 1 - 3 days.

Tech specs

Material: 1.2mm-thick satin finish stainless steel
Inlet connection: top entry for exposed pipework
Width: 350mm
Depth (front to back): 385mm
Height (top to bottom): 500mm
Waste fitting: 38mm
Trap: P trap for through wall waste or waste can be run through the bottom of the urinal

Related products

Our trough urinals can offer a cost saving over individual bowl urinals whilst floor standing urinals can offer a more hygienic installation.

**All pictures shown are for illustration purpose only and may be subject to change without notice. Actual product may vary due to product enhancement.
All dimensions shown are for guidance only and may be subject to change or alteration without notice. All items manufactured or purchased separately from a third party to fit our products should be checked against the actual dimensions of the physical product before purchase. We will not be liable for third party costs and consequential loss associated with the items not fitting third party components.**